DUALTRON

THUNDER II

Personal Mobility

PRODUCT MANUAL

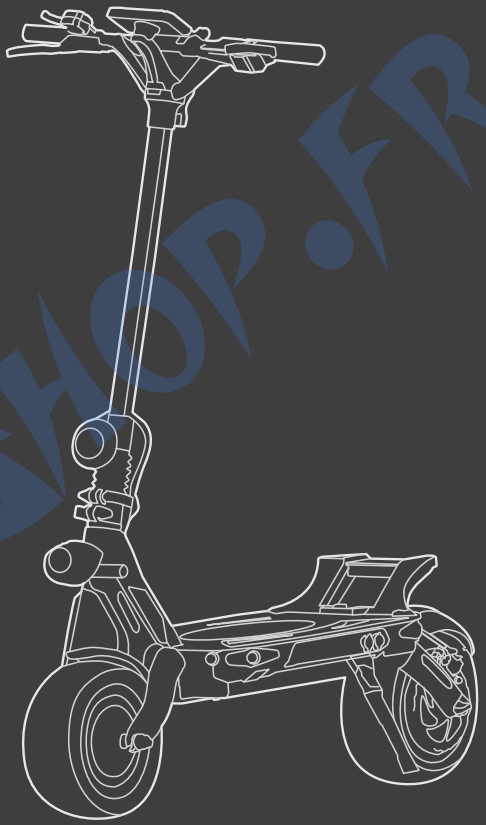

RECICLA
RECYCLE

FOHESHOP.FR

Scan the QR code to download the latest user materials
and obtain the latest updates and safety instructions.

DUALTRON

The dream of electric technology.

Pictures for reference only, subject to our existing products.

FOHZSHOP.FR

DUALTRON

MINIMOTORS

FOHZSHOP.FR

Diagram And Functions

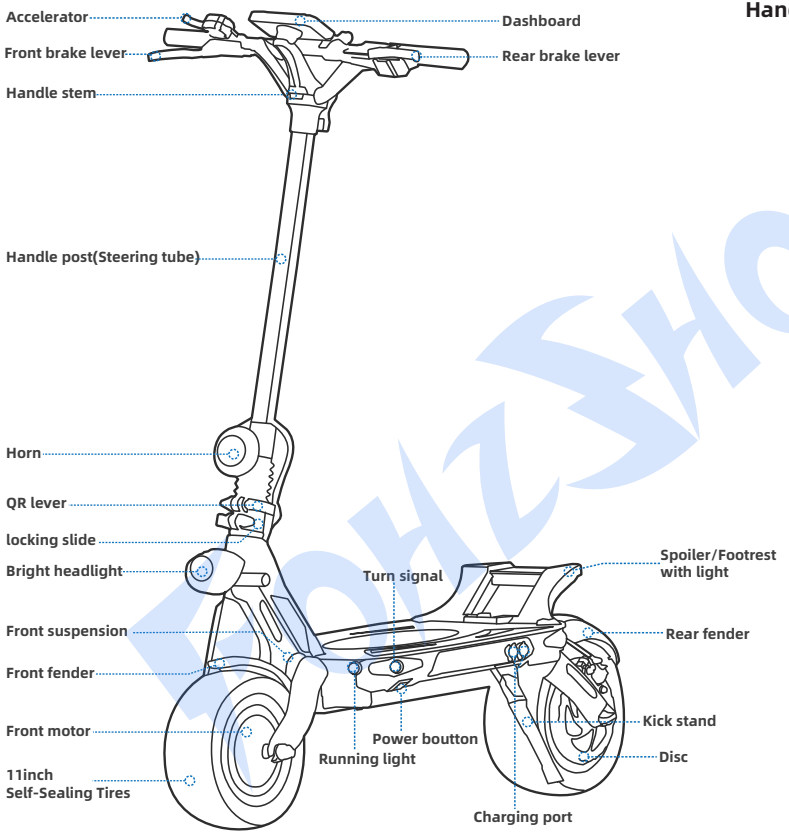

Handlebar Functions

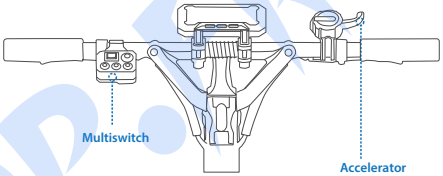

Name	Function	Operation method
Turn Signal Button	Turn on/off the left/right signal	Press the left/right side of the Turn Signal Button, the left/right turn signal will keep blinking.
on/off Headlight Button	Turn on/off the headlight	Press the Headlight Button, the headlight is on;Press it again,the headlight is off.
Horn Button	Turn on the horn	Press the Horn Button, the scooter will beep once.
Warning Light Button	Turn on the warning light	Press the Warning Light Button,the left&right signals will keep blinking until press the Warning Light Button again.
Ambient Light Button	Turn on/off ambient light	Press the Ambient Light Button, turn on/off both sides of ambient light.
Accelerator	Speed up	Pull the throttle to accelerate.

FOHZSHOP.KR

Specifications

	Item	Parameter
Product	**Model**	Dualtron thunder II
Battery	**Battery Capacity**	72V32Ah CN / 72V40Ah (LG or Samsung)
	Range	105km / 130km
	Charging Ambient Temperature	0 to 40°C (Battery temperature exceeds 55°C,BMS start protection program.)
	Battery Management System	Over-heating, short circuit, over-current, over-discharge and over-charge protection
Rider	**Max. load**	120kg
	Recommended Age	16–60 years old
	Required Height	3'11”-6'6”(120-200 cm)
Dispaly	**Type**	EY4 LCD Bluetooth Display(Ability to connect to DUALTRON APP)
Motor	**Motor Type**	BLDC Hub Motor
	Nominal Power	2000W x2
Machine	**Net Weight**	47.3kg
	Max. Slope	Around 70% (35°)
	Drive System	Dual motor
	Speed	25km/h
	Length × Width × Height	1260 x 620 x 1290mm
	Folded: Length × Width × Height	1260 x 320 x 570mm
	Wheelbase	Approx.960mm
	Ground Clearance	Approx.170mm
	Traversable Terrain	Asphalt/flat pavement; obstacles < 5 cm; gaps < 5 cm
	Operating Temperature	-5 to 45°C
	Storage Temperature	-20 to 50°C

FOHZSHOP.FR

Specifications

Brake	**Machine Brake**	Hydraulic Brake
	Electric Brake	ABS&EBS (Indicating the battery temperature exceeds 55°C,BMS start protection program,ABS/EBS fails.)
Charger	**Input Voltage**	100-120V/200-240V~
	Max. Output Voltage	83V 1.5A
Tire	**Type**	11inch Self-Sealing Tires
	Tire Pressure	50 psi
	Material	Rubber
Suspension	**Type**	F&R suspension cartridge（replaceable）
	Optional	（Default） Softest Medium soft Medium Medium hard Hardest

*Disclaimer: this is not a legal opinion or legal advice. The information provided herein (including in the App) is for your convenience and information purpose only. It is not intended to cover every piece of law and/or regulation that may be applicable to this product. DUALTRON explicitly hereby disclaims any and all warranty and/or representation, express or implied, related to completeness, accuracy, up-to-date of such information. DUALTRON reserves the right but not obligation to correct, implement and/or update the information. You shall use the information at your own risk. It is your sole responsibility to learn and understand any and all the law and/or regulation, requirements, prohibition, restriction and/or limitation imposed by either law, government authority, court, private party or the others that may apply to your use of this product.

*Theoretical Range: tested while riding with a full battery, 75 kg load, 25°C, at the speed of 25 km/h on average on pavement.
*Typical Range: tested while riding with a full battery, 75 kg load, 25°C, at the speed of 50 km/h on average on pavement. (Some of the factors that affect range include speed, number of starts and stops, ambient temperature, etc.)
*Max.Speed: tested while riding with a full battery,75kg load,25°C,straight road on flat road with no wind. (Some environmental factors can affect max speed,un-even roads, crooked roads, temperature, wind, etc.)

Packing List

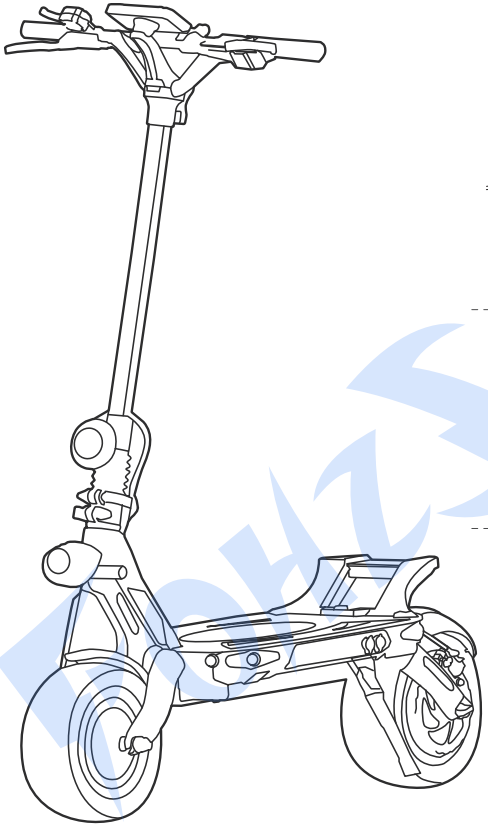

Accessories

Battery charger x1

Manual

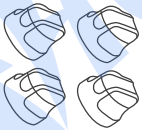

Screw Cap x 4

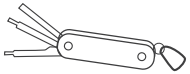

Multitool x 1

ROHZSHOP.FR

Bluetooth Connection

APP Download Guide

Method 1

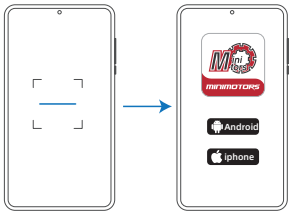

1.Scan the QR code to download the APP.

2.Choose the mobile phone system that suits you to install,and register / log in.

Method 2

1.Search "DUALTRON" in the application and download it, and register / log in.

Pair the Bluetooth on the APP

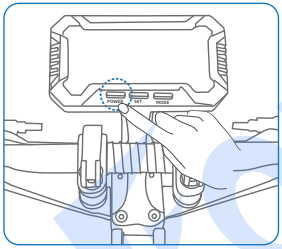

Power on the scooter.

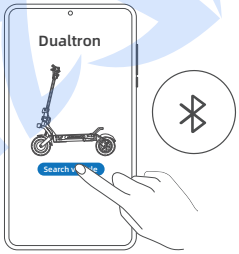

Click "Search vehicle" and pair with your scooter. * The scooter is connected to the Dualtron app when the Bluetooth symbol lights up.

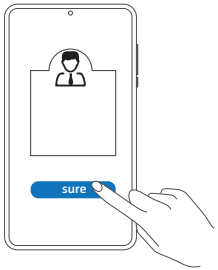

Select "bind as owner".
(No one else can connect, only people authorized by you are allowed to connect. Authorizations are created on the app.)

POHZHOP.FR

Assembly

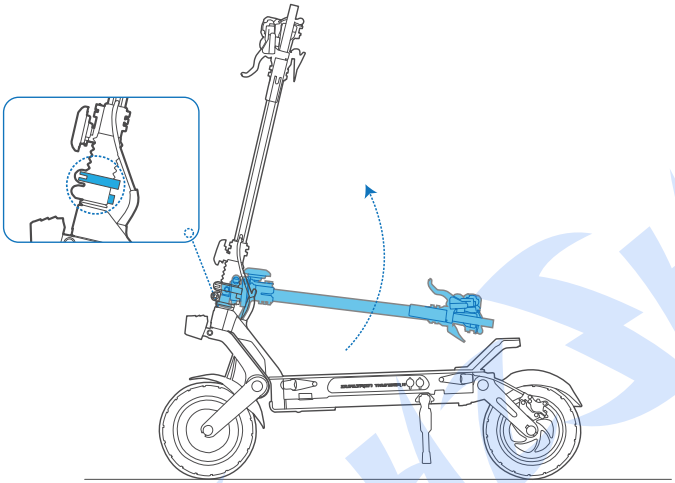

① Release the QR lever,raise the locking slide upwards, raise the steering tube, then lower the locking slide downward.
② Tighten the finishing screw properly to lock the QR lever so that the locking slide is firmly fixed in any direction, and check for looseness during use.

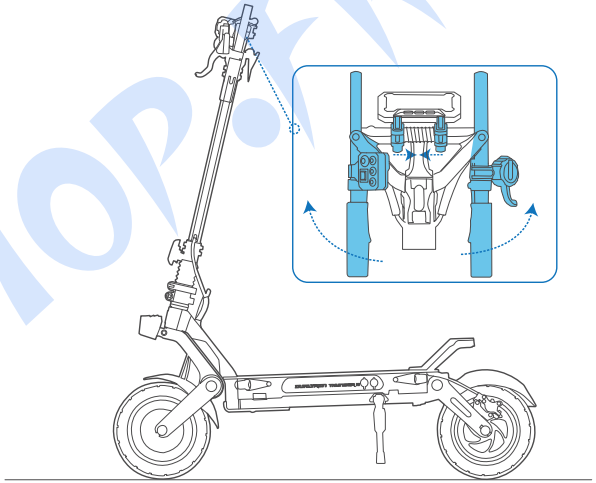

① Loosen the QR lever, pull the locking slide inward and raise the handlebar, then close the QR lever and tighten the set screw.
② Place the locking slide up to the safety line and lock it so that it is firmly fixed with the QR lever. Always check for looseness during use.

YOHOSHOPER

How to Ride

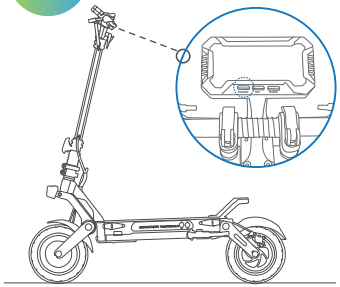

1. Power on the scooter and choose the speed mode. * Please choose the speed mode before riding! Note:Speed mode can be choose via the Dualtron app.

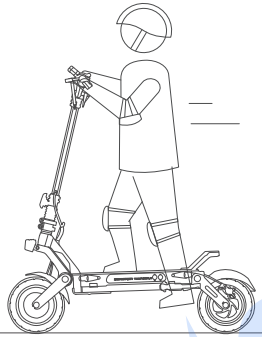

2. Stand on the footboard with one foot and push off with the other foot to start gliding. *Make sure you have disabled SAFE mode.(SAFE mode setting via Dualtron app.Deactivate safe mode by squeezing brake lever.)

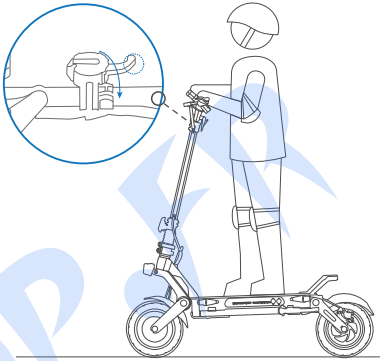

3. Put both feet on the footboard and stand stably. Pull the throttle to speed up.

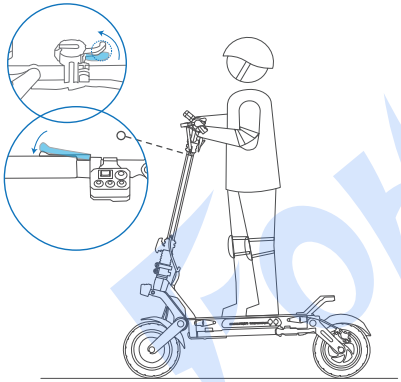

4. Slow down by releasing the throttle and squeezing brake levers.

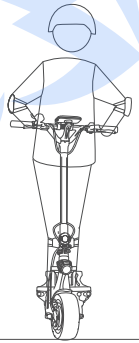

5. To turn, shift your body and turn the handlebar slightly.
* Please watch out for road conditions, sufficient turning space is required.

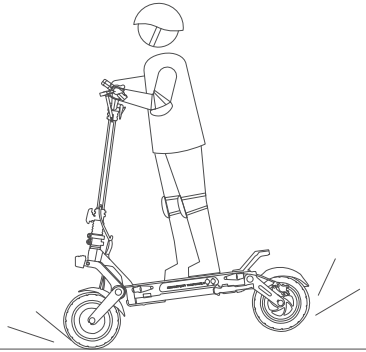

When hard braking, serious danger or injury may occur. Maintain a moderate speed and look out for potential hazards.

FOHZ SHOP.FR

Folding

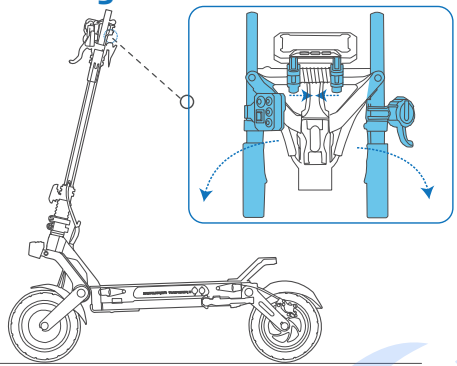

Loosen the QR lever, push the locking slider inward and fold the handlebars down.

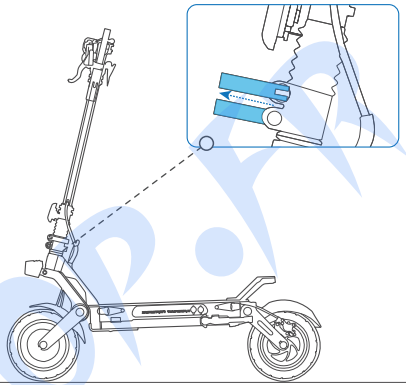

Loosen the QR lever and move the locking slide upward.
⚠ You must hold the steering tube with your hand to prevent falling down and hitting.

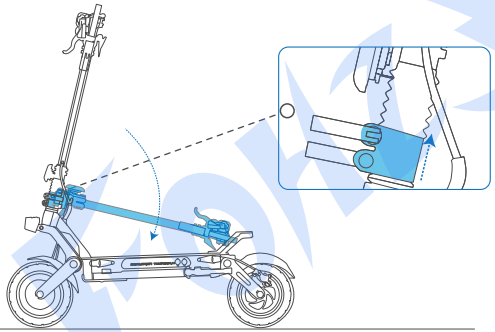

Lay the steering tube down while raising the locking slide.

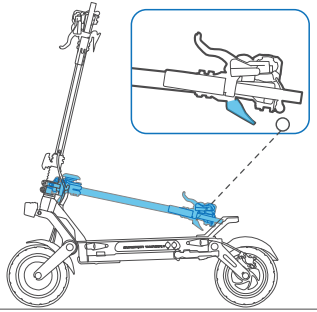

Lock the handlebar hook to the footrest.
⚠ Ensure that lock the handlebar when lift scooter.

FOHZSHOP.FR